Linear carriage KWSE25-H-V2-G2 INA

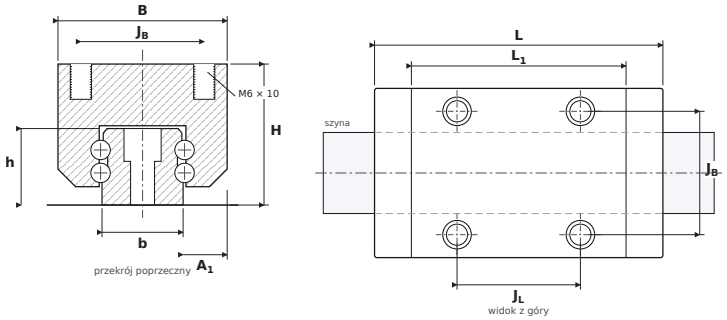

DIMENSIONS

B	carriage width	**48 mm**
H	overall height (carriage on rail)	**40 mm**
L	overall carriage length	**81.8 mm**
L1	body length (without end seals)	**60.9 mm**
JB	mounting hole spacing — across	**35 mm**
JL	corner hole spacing — along	**35 mm**
A1	rail flank to carriage side	**12.5 mm**
b	rail width	**23 mm**
h	rail height	**21.7 mm**

SPECIFICATIONS

Manufacturer	**INA**
Manufacturer designation	**KWSE25-H-V2-G2**
Rolling elements	**six-row ball carriage**
Basic dynamic load rating C	**38 kN**
Basic static load rating C0	**81 kN**
Mass	**0.5 kg**
carriage mounting thread ($G_2 \times T_5$)	**M6 × 10 mm**
matching rail	**TKSD25 · screws M6 (17 Nm)**
static moments M_{0x} / M_{0Y} / M_{0Z}	**840 / 510 / 450 Nm**