Spherical roller bearing 22320 K.EJAVA405 SKF

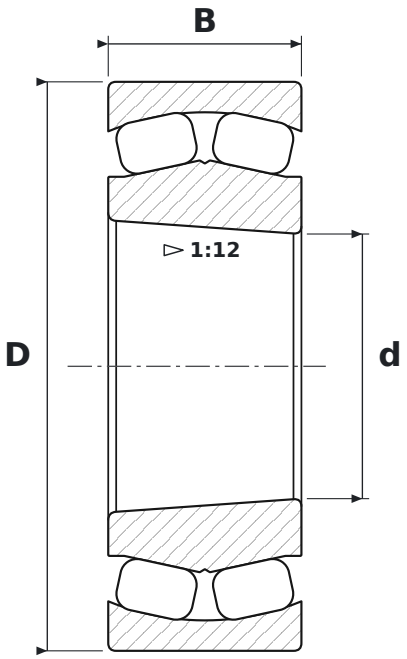

DIMENSIONS

d	bore diameter	**100 mm**
D	outside diameter	**215 mm**
B	width	**73 mm**

SPECIFICATIONS

Manufacturer	**SKF**
Manufacturer designation	**22320 K.EJAVA405**
Rolling elements	**double-row spherical roller bearing**
K	**tapered bore, taper 1:12**
EJ	**pressed steel cage (Timken)**
Seal	**open – no seals**
Radial internal clearance	**CN – normal**