Cylindrical roller bearing NU307 EW NSK

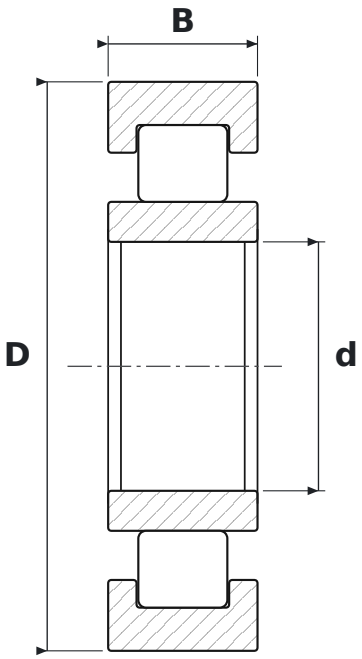

DIMENSIONS

d	bore diameter	**35 mm**
D	outside diameter	**80 mm**
B	width	**21 mm**

SPECIFICATIONS

Manufacturer	**NSK**
Manufacturer designation	**NU307 EW**
Rolling elements	**single-row cylindrical roller bearing**
EW	**reinforced design, steel cage (NSK)**
Seal	**open – no seals**
Radial internal clearance	**CN – normal**