Cylindrical roller bearing NU307 EWC3 NSK

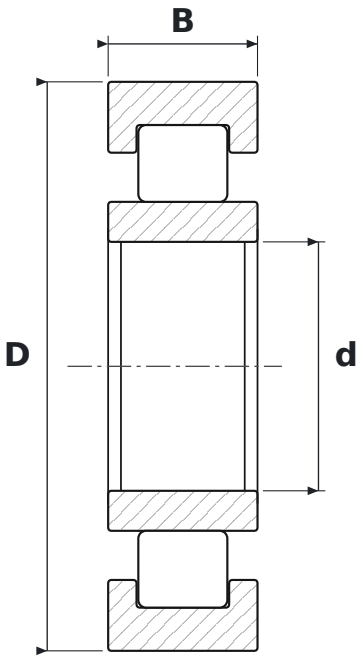

DIMENSIONS

d	bore diameter	**35 mm**
D	outside diameter	**80 mm**
B	width	**21 mm**

WHAT NU307 EWC3 MEANS

EW	reinforced design, steel cage (NSK)
C3	radial clearance greater than normal

SPECIFICATIONS

Manufacturer	**NSK**
Manufacturer designation	**NU307 EWC3**
Rolling elements	**single-row cylindrical roller bearing**