Deep groove ball bearing 393921 E SKF

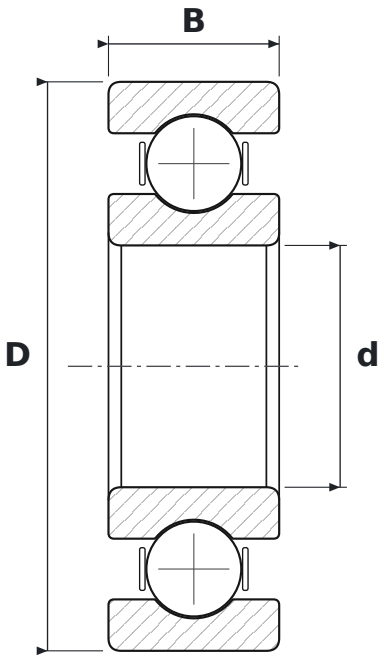

DIMENSIONS

d	bore diameter	**17 mm**
D	outside diameter	**40 mm**
B	width	**12 mm**

SPECIFICATIONS

Manufacturer	**SKF**
Manufacturer designation	**393921 E**
Rolling elements	**single-row ball bearing**
E	**reinforced design, higher load rating**
Seal	**open – no seals**
Radial internal clearance	**CN – normal**