Angular contact ball bearing QJ207-MPA FAG

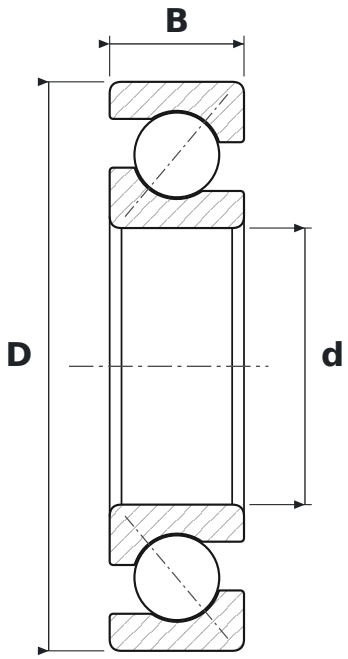

DIMENSIONS

d	bore diameter	**35 mm**
D	outside diameter	**72 mm**
B	width	**17 mm**

SPECIFICATIONS

Manufacturer	**FAG**
Manufacturer designation	**QJ207-MPA**
Rolling elements	**single-row ball bearing**
MPA	**koszyk mosiężny masywny (łożyska czteropunktowe QJ)**
Seal	**open – no seals**
Radial internal clearance	**CN – normal**
Cage	**Brass**