Deep groove ball bearing 619/5 SKF

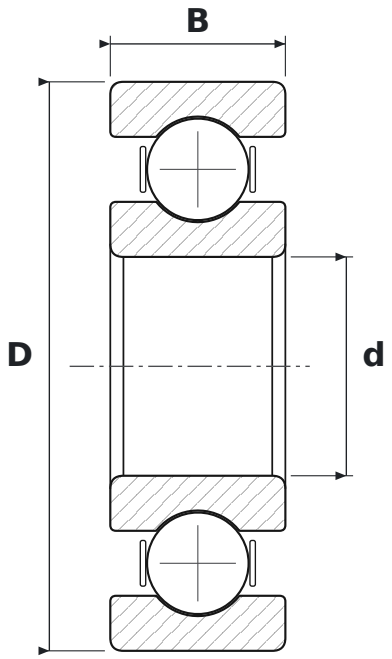

DIMENSIONS

d	bore diameter	**5 mm**
D	outside diameter	**13 mm**
B	width	**4 mm**

SPECIFICATIONS

Manufacturer	**SKF**
Manufacturer designation	**619/5**
Rolling elements	**single-row ball bearing**
Seal	**open – no seals**
Radial internal clearance	**CN – normal**