Deep groove ball bearing 6332 MC3 SKF

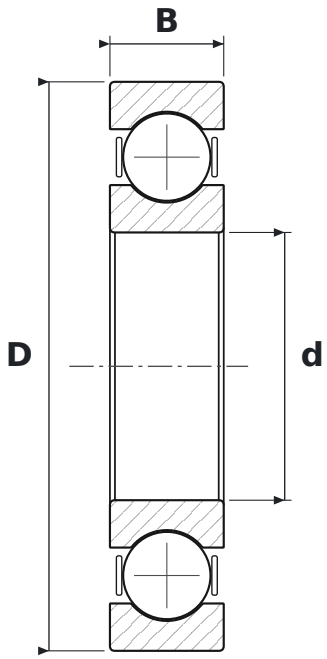

DIMENSIONS

d	bore diameter	**160 mm**
D	outside diameter	**340 mm**
B	width	**68 mm**

WHAT 6332 MC3 MEANS

63	łożysko kulkowe zwykłe (6), seria średnic 3 – średnia
M	machined brass cage
C3	radial clearance greater than normal

SPECIFICATIONS

Manufacturer	**SKF**
Manufacturer designation	**6332 MC3**
Rolling elements	**single-row ball bearing**