Deep groove ball bearing 6319 MC3 SKF

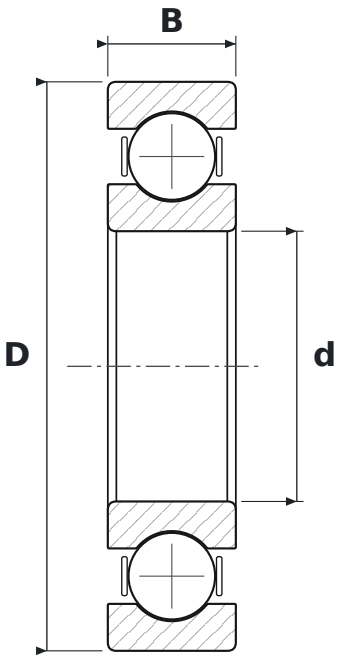

DIMENSIONS

d	bore diameter	**95 mm**
D	outside diameter	**200 mm**
B	width	**45 mm**

WHAT 6319 MC3 MEANS

63	łożysko kulkowe zwykłe (6), seria średnic 3 – średnia
M	machined brass cage
C3	radial clearance greater than normal

SPECIFICATIONS

Manufacturer	**SKF**
Manufacturer designation	**6319 MC3**
Rolling elements	**single-row ball bearing**
Basic dynamic load rating C	**163 kN**
Basic static load rating C0	**118 kN**