Deep groove ball bearing 6326 C3 SKF

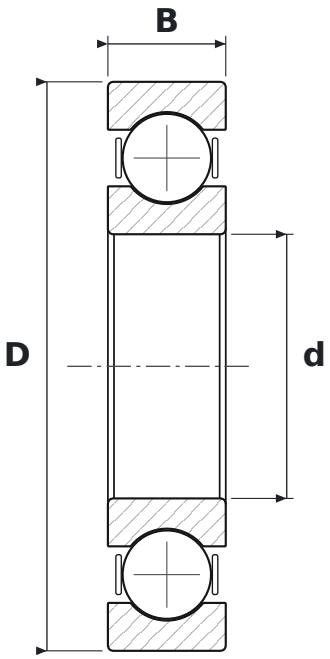

DIMENSIONS

d	bore diameter	**130 mm**
D	outside diameter	**280 mm**
B	width	**58 mm**

WHAT 6326 C3 MEANS

63	łożysko kulkowe zwykłe (6), seria średnic 3 – średnia
C3	radial clearance greater than normal

SPECIFICATIONS

Manufacturer	**SKF**
Manufacturer designation	**6326 C3**
Rolling elements	**single-row ball bearing**