Deep groove ball bearing W628/8-ZZ SKF

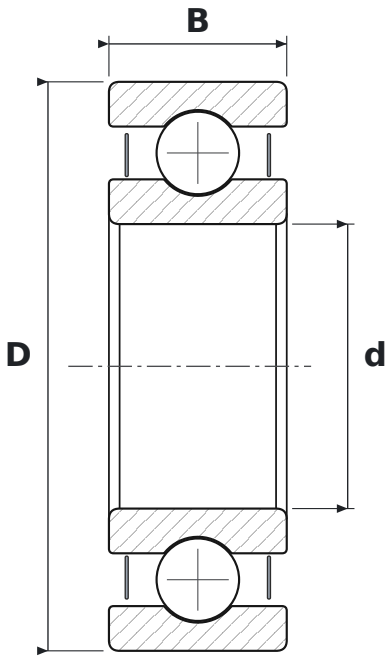

DIMENSIONS

d	bore diameter	**8 mm**
D	outside diameter	**16 mm**
B	width	**5 mm**

SPECIFICATIONS

Manufacturer	**SKF**
Manufacturer designation	**W628/8-ZZ**
Rolling elements	**single-row ball bearing**
2Z	**steel shields, both sides**
Radial internal clearance	**CN – normal**
Features	**Stainless steel**