Deep groove ball bearing 6211-2Z SKF

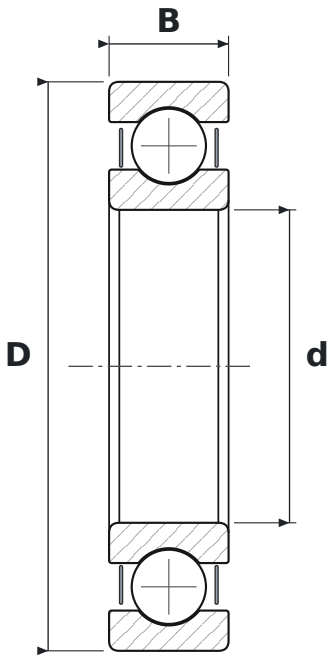

DIMENSIONS

d	bore diameter	**55 mm**
D	outside diameter	**100 mm**
B	width	**21 mm**

WHAT 6211-2Z MEANS

62	łożysko kulkowe zwykłe (6), seria średnic 2 – lekka
2Z	steel shields, both sides

SPECIFICATIONS

Manufacturer	**SKF**
Manufacturer designation	**6211-2Z**
Rolling elements	**single-row ball bearing**
Basic dynamic load rating C	**46.2 kN**
Basic static load rating C0	**29 kN**