Deep groove ball bearing 3800-2RS INA

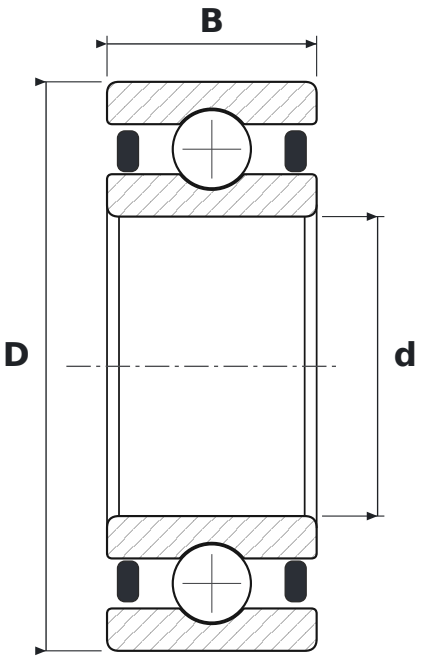

DIMENSIONS

d	bore diameter	**10 mm**
D	outside diameter	**19 mm**
B	width	**7 mm**

SPECIFICATIONS

Manufacturer	**INA**
Manufacturer designation	**3800-2RS**
Rolling elements	**single-row ball bearing**
2RS	**contact rubber seals, both sides**
Radial internal clearance	**CN – normal**