Deep groove ball bearing 6224-MA-C3 FAG

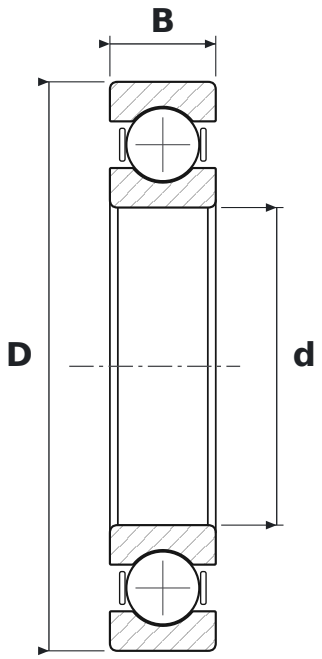

DIMENSIONS

d	bore diameter	**120 mm**
D	outside diameter	**215 mm**
B	width	**40 mm**

WHAT 6224-MA-C3 MEANS

62	łożysko kulkowe zwykłe (6), seria średnic 2 – lekka
MA	machined brass cage, outer ring centred
C3	radial clearance greater than normal

SPECIFICATIONS

Manufacturer	**FAG**
Manufacturer designation	**6224-MA-C3**
Rolling elements	**single-row ball bearing**