Deep groove ball bearing 609-2Z/C3 SKF

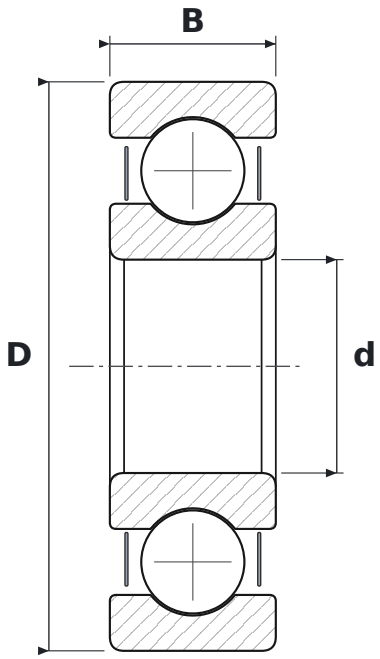

DIMENSIONS

d	bore diameter	**9 mm**
D	outside diameter	**24 mm**
B	width	**7 mm**

WHAT 609-2Z/C3 MEANS

2Z	steel shields, both sides
C3	radial clearance greater than normal

SPECIFICATIONS

Manufacturer	**SKF**
Manufacturer designation	**609-2Z/C3**
Rolling elements	**single-row ball bearing**