Deep groove ball bearing 6003 C3 SKF

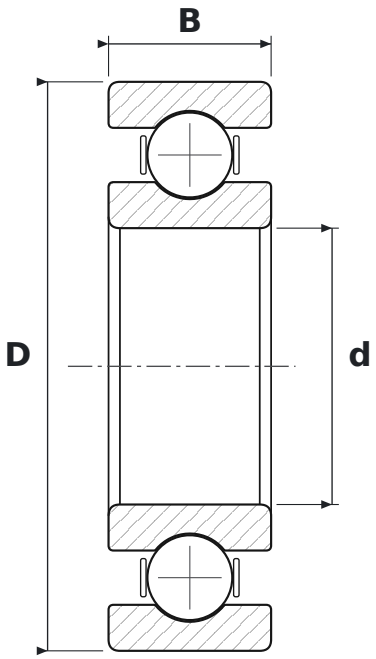

DIMENSIONS

d	bore diameter	**17 mm**
D	outside diameter	**35 mm**
B	width	**10 mm**

WHAT 6003 C3 MEANS

60	łożysko kulkowe zwykłe (6), seria średnic 0 – bardzo lekka
C3	radial clearance greater than normal

SPECIFICATIONS

Manufacturer	**SKF**
Manufacturer designation	**6003 C3**
Rolling elements	**single-row ball bearing**
Basic dynamic load rating C	**6.37 kN**
Basic static load rating C0	**3.25 kN**