CASTOMER

DATASHEET

Cylindrical roller bearing NJ222 ECJC3 SKF

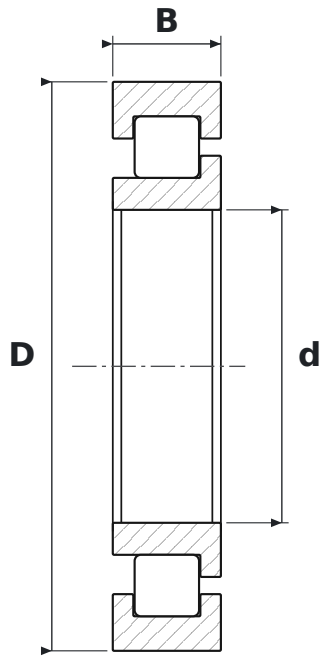

DIMENSIONS

d	bore diameter	**110 mm**
D	outside diameter	**200 mm**
B	width	**38 mm**

WHAT NJ222 ECJC3 MEANS

ECJ	EC design, pressed steel cage (SKF)
C3	radial clearance greater than normal

SPECIFICATIONS

Manufacturer	**SKF**
Manufacturer designation	**NJ222 ECJC3**
Rolling elements	**single-row cylindrical roller bearing**