Tapered roller bearing 32005 X NKE

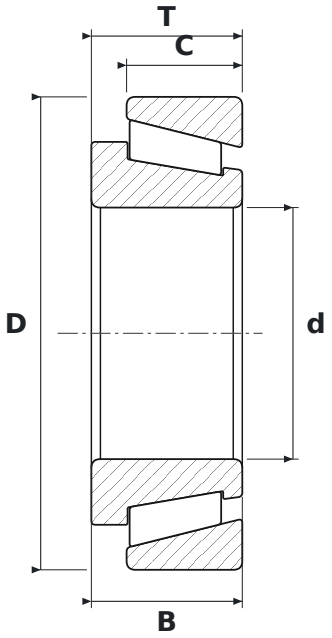

DIMENSIONS

d	bore diameter	**25 mm**
D	outside diameter	**47 mm**
T	total width	**15 mm**
B	inner ring width	**15 mm**
C	outer ring width	**11.5 mm**

SPECIFICATIONS

Manufacturer	**NKE**
Manufacturer designation	**32005 X**
B – inner ring width	**15 mm**
C – outer ring width	**11.5 mm**
Rolling elements	**single-row tapered roller bearing**
Seal	**open – no seals**