Cylindrical roller bearing NU2217 ECML SKF

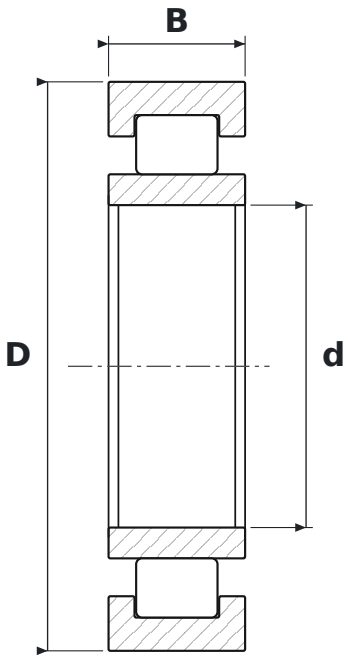

DIMENSIONS

d	bore diameter	**85 mm**
D	outside diameter	**150 mm**
B	width	**36 mm**

WHAT NU2217 ECML MEANS

EC	reinforced EC design, more rollers (SKF)
ML	koszyk mosiężny masywny okienkowy, prowadzony na pierścieniu wewnętrznym lub zewnętrznym

SPECIFICATIONS

Manufacturer	**SKF**
Manufacturer designation	**NU2217 ECML**
Rolling elements	**single-row cylindrical roller bearing**