Cylindrical roller bearing NU236 ECMLC3 SKF

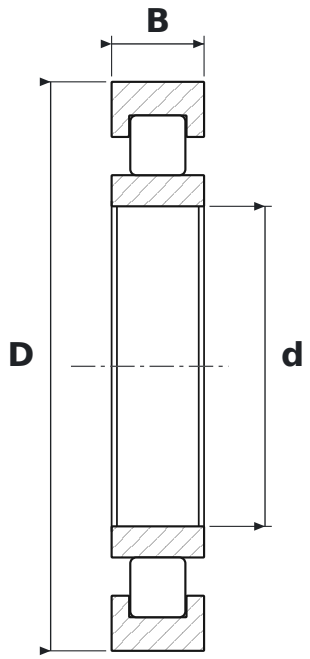

DIMENSIONS

d	bore diameter	**180 mm**
D	outside diameter	**320 mm**
B	width	**52 mm**

WHAT NU236 ECMLC3 MEANS

EC	reinforced EC design, more rollers (SKF)
ML	koszyk mosiężny masywny okienkowy, prowadzony na pierścieniu wewnętrznym lub zewnętrznym
C3	radial clearance greater than normal

SPECIFICATIONS

Manufacturer	**SKF**
Manufacturer designation	**NU236 ECMLC3**
Rolling elements	**single-row cylindrical roller bearing**