Angular contact ball bearing 7213 BETVP NKE

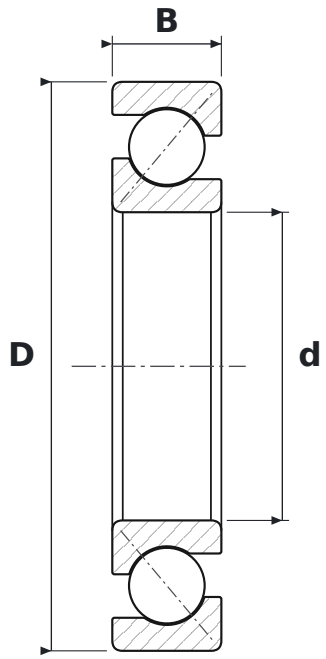

DIMENSIONS

d	bore diameter	**65 mm**
D	outside diameter	**120 mm**
B	width	**23 mm**

WHAT 7213 BETVP MEANS

BE	40° contact angle, reinforced design
TVP	koszyk poliamidowy okienkowy

SPECIFICATIONS

Manufacturer	**NKE**
Manufacturer designation	**7213 BETVP**
Rolling elements	**single-row ball bearing**