Spherical plain bearing GE12 LO ZEN

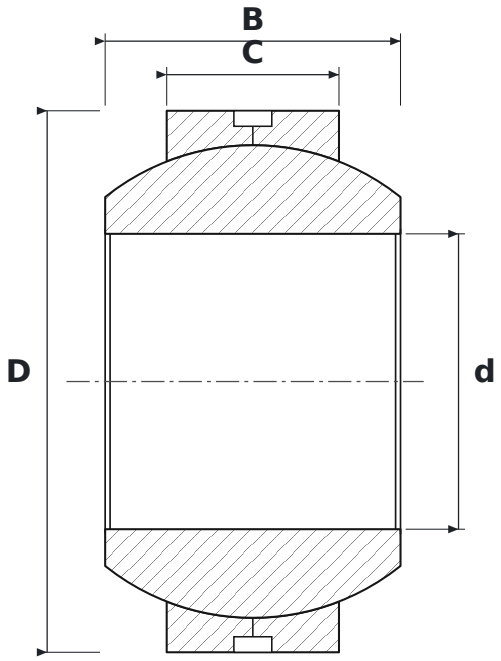

DIMENSIONS

d	bore diameter	**12 mm**
D	outside diameter	**22 mm**
B	inner ring (ball) width	**12 mm**
C	outer ring width	**7 mm**

SPECIFICATIONS

Manufacturer	**ZEN**
Manufacturer designation	**GE12 LO**
C – outer ring width	**7 mm**
Rolling elements	**plain bearing (no rolling elements)**
Features	**Lubrication groove and holes**