Angular contact ball bearing QJ306 MPAC3 NKE

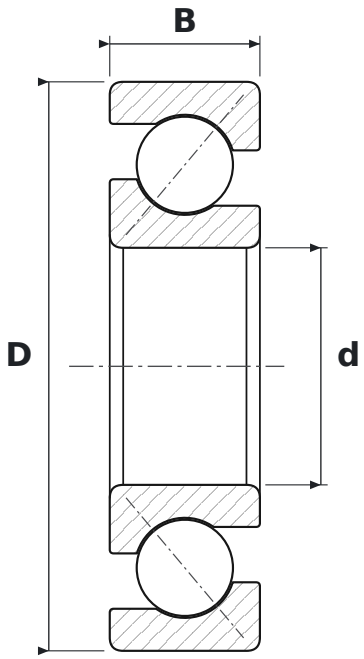

DIMENSIONS

d	bore diameter	**30 mm**
D	outside diameter	**72 mm**
B	width	**19 mm**

SPECIFICATIONS

Manufacturer	**NKE**
Manufacturer designation	**QJ306 MPAC3**
Rolling elements	**single-row ball bearing**
MPA	**manufacturer design code**
C3	**radial clearance greater than normal**
Seal	**open – no seals**
Cage	**Brass**