Spherical plain bearing GE35 ES NKE

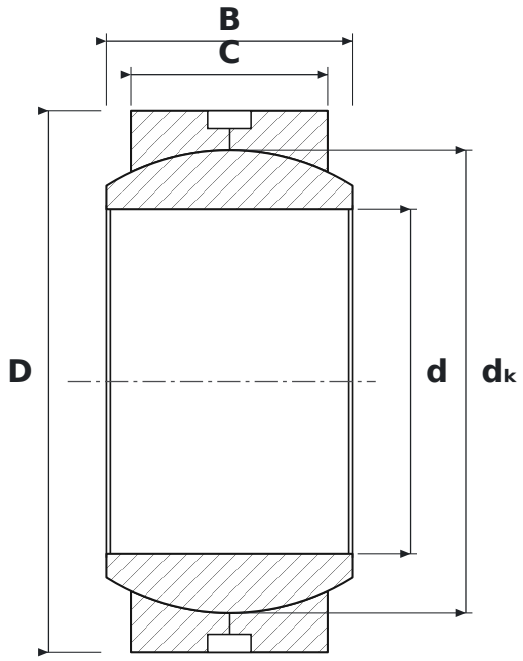

DIMENSIONS

d	bore diameter	**35 mm**
D	outside diameter	**55 mm**
B	inner ring (ball) width	**25 mm**
C	outer ring width	**20 mm**
dK	ball diameter	**47 mm**

SPECIFICATIONS

Manufacturer	**NKE**
Manufacturer designation	**GE35 ES**
C – outer ring width	**20 mm**
Rolling elements	**plain bearing (no rolling elements)**
Features	**Lubrication groove and holes**