Deep groove ball bearing 6305 C3 NKE

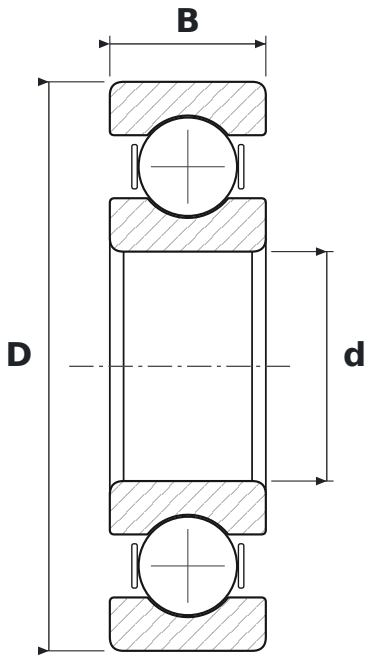

DIMENSIONS

d	bore diameter	**25 mm**
D	outside diameter	**62 mm**
B	width	**17 mm**

WHAT 6305 C3 MEANS

63	łożysko kulkowe zwykłe (6), seria średnic 3 – średnia
C3	radial clearance greater than normal

SPECIFICATIONS

Manufacturer	**NKE**
Manufacturer designation	**6305 C3**
Rolling elements	**single-row ball bearing**