Tapered roller bearing 30313 NKE

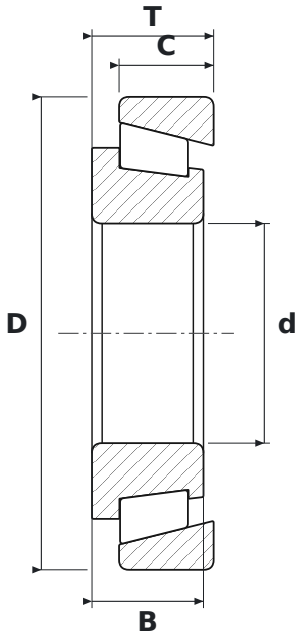

DIMENSIONS

d	bore diameter	**65 mm**
D	outside diameter	**140 mm**
T	total width	**36 mm**
B	inner ring width	**33 mm**
C	outer ring width	**28 mm**

SPECIFICATIONS

Manufacturer	**NKE**
Manufacturer designation	**30313**
B – inner ring width	**33 mm**
C – outer ring width	**28 mm**
Rolling elements	**single-row tapered roller bearing**
Seal	**open – no seals**