Needle roller bearing BK1816 NKE

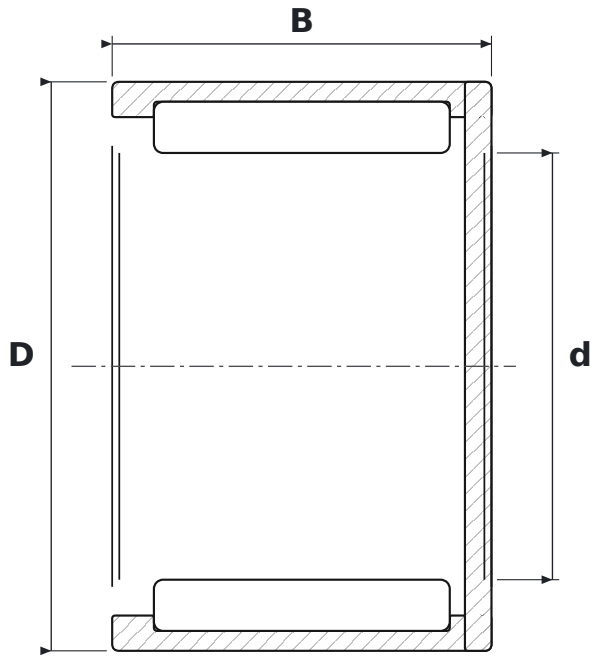

DIMENSIONS

d	bore diameter	**18 mm**
D	outside diameter	**24 mm**
B	width	**16 mm**

SPECIFICATIONS

Manufacturer	**NKE**
Manufacturer designation	**BK1816**
Rolling elements	**needle roller bearing**
Seal	**open – no seals**
Radial internal clearance	**CN – normal**