Cylindrical roller bearing NUP308 ECMC3 SKF

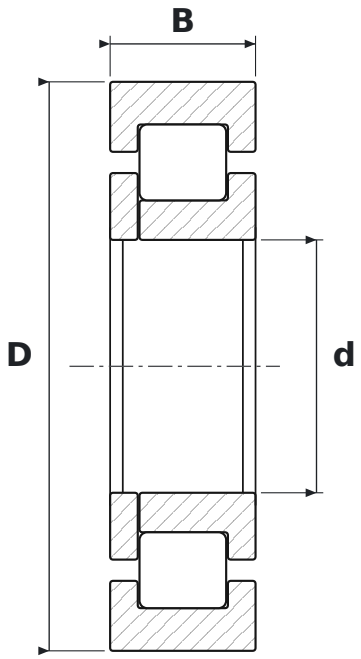

DIMENSIONS

d	bore diameter	**40 mm**
D	outside diameter	**90 mm**
B	width	**23 mm**

WHAT NUP308 ECMC3 MEANS

ECM	EC design, machined brass cage (SKF)
C3	radial clearance greater than normal

SPECIFICATIONS

Manufacturer	**SKF**
Manufacturer designation	**NUP308 ECMC3**
Rolling elements	**single-row cylindrical roller bearing**