Spherical plain bearing GE100 UK2RS INA

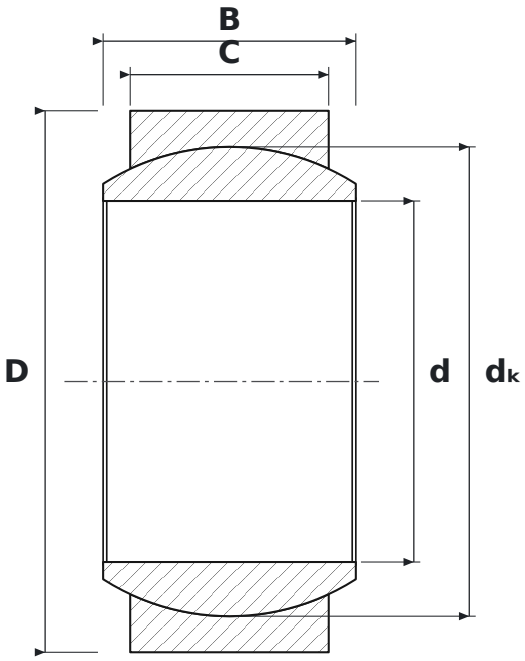

DIMENSIONS

d	bore diameter	**100 mm**
D	outside diameter	**150 mm**
B	inner ring (ball) width	**70 mm**
C	outer ring width	**55 mm**
dK	ball diameter	**130 mm**

SPECIFICATIONS

Manufacturer	**INA**
Manufacturer designation	**GE100 UK2RS**
B – inner ring width	**70 mm**
C – outer ring width	**55 mm**
Rolling elements	**plain bearing (no rolling elements)**
K	**tapered bore, taper 1:12**
2RS	**contact rubber seals, both sides**
Basic dynamic load rating C	**865 kN**
Basic static load rating C0	**1,730 kN**