Cylindrical roller bearing SL183009 INA

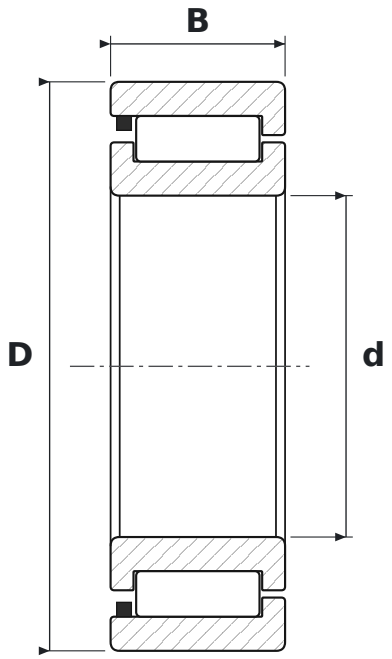

DIMENSIONS

d	bore diameter	**45 mm**
D	outside diameter	**75 mm**
B	width	**23 mm**

SPECIFICATIONS

Manufacturer	**INA**
Manufacturer designation	**SL183009**
Rolling elements	**single-row cylindrical roller bearing, full complement**
Seal	**open – no seals**
Radial internal clearance	**CN – normal**
Basic dynamic load rating C	**70 kN**
Basic static load rating C0	**74 kN**