Spherical plain bearing GE110 DO2RS INA

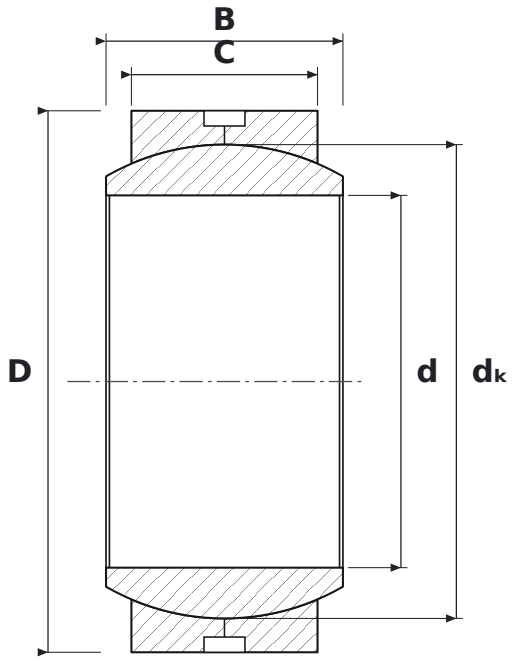

DIMENSIONS

d	bore diameter	**110 mm**
D	outside diameter	**160 mm**
B	inner ring (ball) width	**70 mm**
C	outer ring width	**55 mm**
dK	ball diameter	**140 mm**

WHAT GE110 DO2RS MEANS

DO	przegub poprzeczny wymagający smarowania, skojarzenie ślizgowe stal/stal
2RS	contact rubber seals, both sides

SPECIFICATIONS

Manufacturer	**INA**
Manufacturer designation	**GE110 DO2RS**
B – inner ring width	**70 mm**
C – outer ring width	**55 mm**
Rolling elements	**plain bearing (no rolling elements)**