Deep groove ball bearing 62303-2RS1 SKF

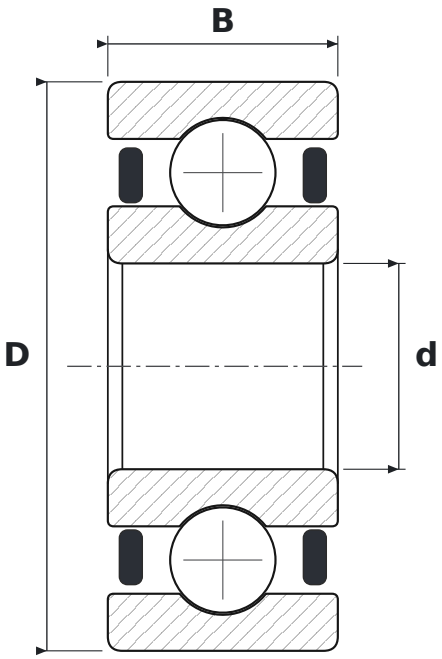

DIMENSIONS

d	bore diameter	**17 mm**
D	outside diameter	**47 mm**
B	width	**19 mm**

SPECIFICATIONS

Manufacturer	**SKF**
Manufacturer designation	**62303-2RS1**
Rolling elements	**single-row ball bearing**
2RS	**contact rubber seals, both sides**
Radial internal clearance	**CN – normal**