Cylindrical roller bearing NUP307 ECJ SKF

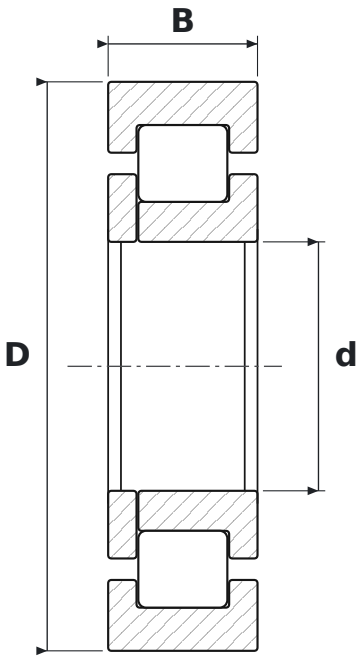

DIMENSIONS

d	bore diameter	**35 mm**
D	outside diameter	**80 mm**
B	width	**21 mm**

SPECIFICATIONS

Manufacturer	**SKF**
Manufacturer designation	**NUP307 ECJ**
Rolling elements	**single-row cylindrical roller bearing**
ECJ	**EC design, pressed steel cage (SKF)**
Seal	**open – no seals**
Radial internal clearance	**CN – normal**
Cage	**Steel**