Deep groove ball bearing MR137-2Z ZEN

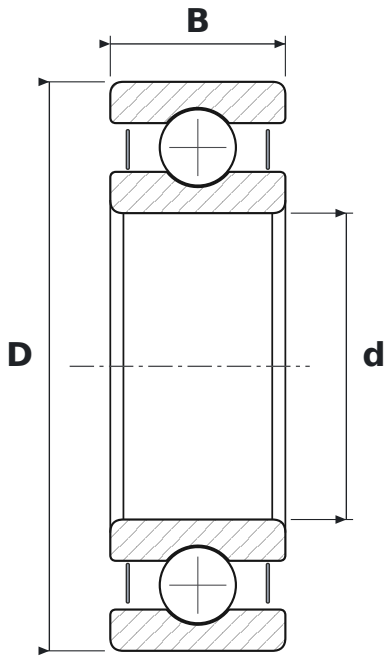

DIMENSIONS

d	bore diameter	**7 mm**
D	outside diameter	**13 mm**
B	width	**4 mm**

SPECIFICATIONS

Manufacturer	**ZEN**
Manufacturer designation	**MR137-2Z**
Rolling elements	**single-row ball bearing**
2Z	**steel shields, both sides**
Radial internal clearance	**CN – normal**