# Spherical plain bearing GE200 UK2RS INA

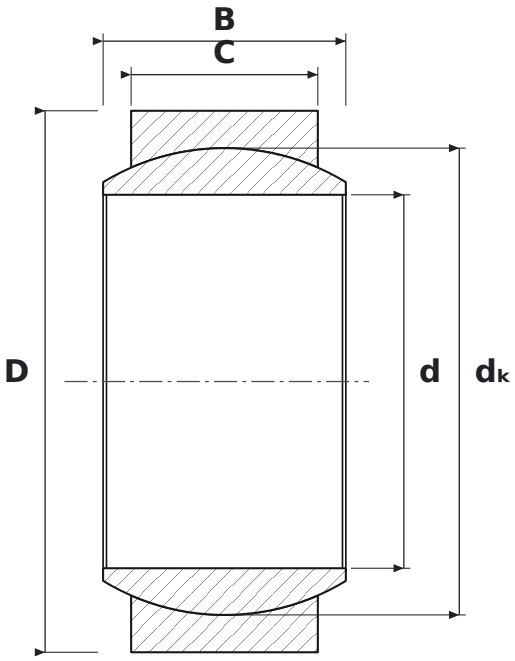


## DIMENSIONS

| | | |
|---|---|---|
| **d** | bore diameter | **200 mm** |
| **D** | outside diameter | **290 mm** |
| **B** | inner ring (ball) width | **130 mm** |
| **C** | outer ring width | **100 mm** |
| **dK** | ball diameter | **250 mm** |

## SPECIFICATIONS

| | |
|---|---|
| Manufacturer | **INA** |
| Manufacturer designation | **GE200 UK2RS** |
| B – inner ring width | **130 mm** |
| C – outer ring width | **100 mm** |
| Rolling elements | **plain bearing (no rolling elements)** |
| K | **tapered bore, taper 1:12** |
| 2RS | **contact rubber seals, both sides** |
| Basic dynamic load rating C | **3,000 kN** |
| Basic static load rating C0 | **6,000 kN** |