# Spherical plain bearing GE60 HO2RS INA

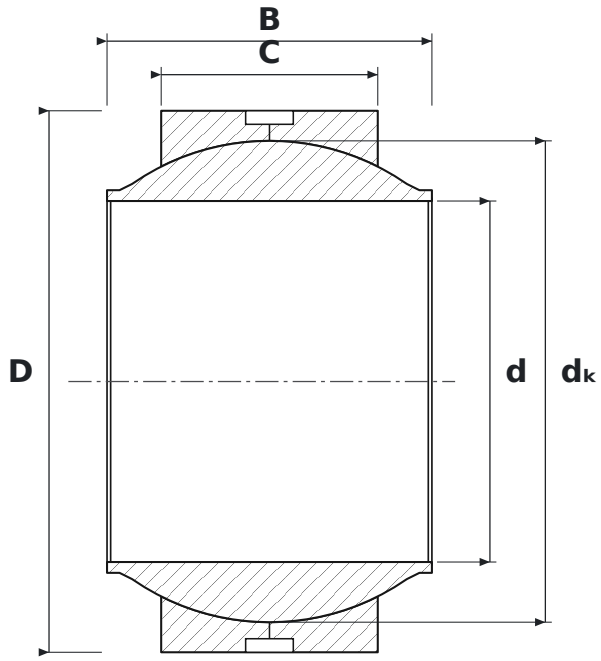


## DIMENSIONS

| | | |
|---|---|---|
| **d** | bore diameter | **60 mm** |
| **D** | outside diameter | **90 mm** |
| **B** | inner ring (ball) width | **54 mm** |
| **C** | outer ring width | **36 mm** |
| **dK** | ball diameter | **80 mm** |

## SPECIFICATIONS

| | |
|---|---|
| Manufacturer | **INA** |
| Manufacturer designation | **GE60 HO2RS** |
| B – inner ring width | **54 mm** |
| C – outer ring width | **36 mm** |
| Rolling elements | **plain bearing (no rolling elements)** |
| Features | **Lubrication groove and holes** |
| Basic dynamic load rating C | **245 kN** |
| Basic static load rating C0 | **1,220 kN** |