Spherical plain bearing GE45 SX INA

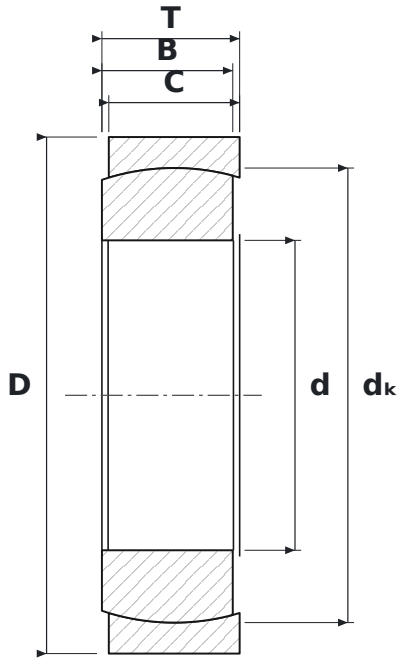

DIMENSIONS

d	bore diameter	**45 mm**
D	outside diameter	**75 mm**
T	total width	**20 mm**
B	inner ring (ball) width	**19 mm**
C	outer ring width	**19 mm**
dK	ball diameter	**66 mm**

SPECIFICATIONS

Manufacturer	**INA**
Manufacturer designation	**GE45 SX**
B – inner ring width	**19 mm**
C – outer ring width	**19 mm**
Rolling elements	**plain bearing (no rolling elements)**
Features	**Lubrication groove and holes**
Basic dynamic load rating C	**106 kN**
Basic static load rating C0	**530 kN**