Rod end DSIL45 ES2RS DURBAL

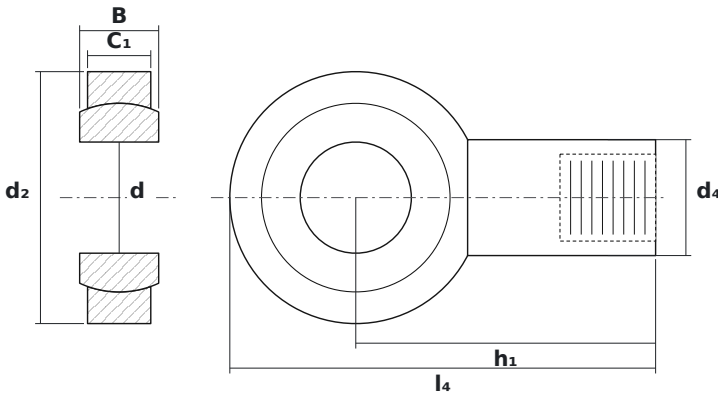

DIMENSIONS

d	bore diameter	**45 mm**
d2	rod end head diameter	**102 mm**
B	ball (inner ring) width	**32 mm**

SPECIFICATIONS

Manufacturer	**DURBAL**
Manufacturer designation	**DSIL45 ES2RS**
Rolling elements	**plain bearing (no rolling elements)**