# Cylindrical roller bearing NUP222-EM1 FAG

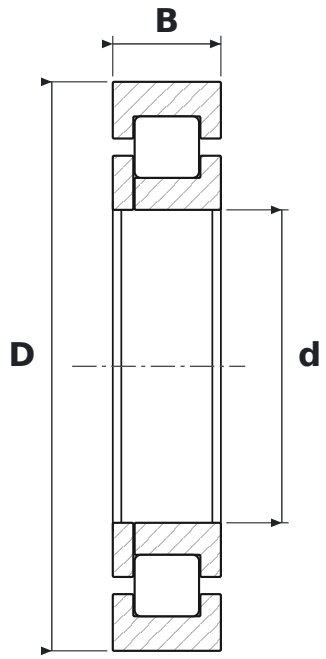


## DIMENSIONS

| | | |
|---|---|---|
| **d** | bore diameter | **110 mm** |
| **D** | outside diameter | **200 mm** |
| **B** | width | **38 mm** |

## WHAT NUP222-EM1 MEANS

| | |
|---|---|
| **E** | reinforced design, higher load rating |
| **M1** | koszyk mosiężny masywny, dwuczęściowy, prowadzony na wałeczkach |

## SPECIFICATIONS

| | |
|---|---|
| Manufacturer | **FAG** |
| Manufacturer designation | **NUP222-EM1** |
| Rolling elements | **single-row cylindrical roller bearing** |