Deep groove ball bearing 6215 SKF

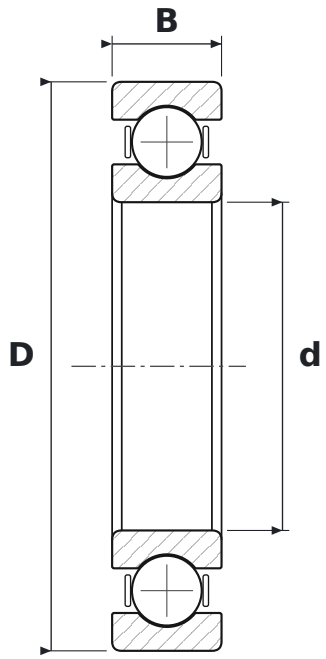

DIMENSIONS

d	bore diameter	**75 mm**
D	outside diameter	**130 mm**
B	width	**25 mm**

SPECIFICATIONS

Manufacturer	**SKF**
Manufacturer designation	**6215**
Rolling elements	**single-row ball bearing**
Seal	**open – no seals**
Radial internal clearance	**CN – normal**
Basic dynamic load rating C	**68.9 kN**
Basic static load rating C0	**49 kN**