Deep groove ball bearing 61804-2RZ SKF

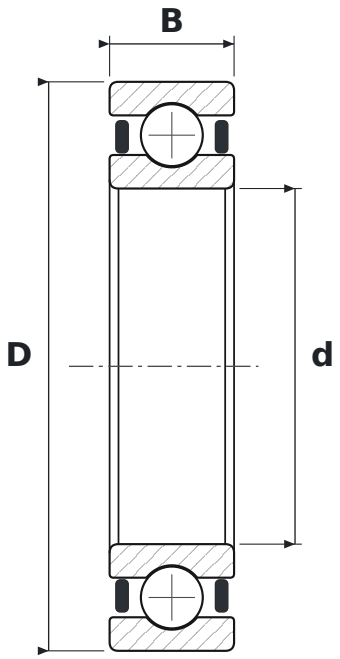

DIMENSIONS

d	bore diameter	**20 mm**
D	outside diameter	**32 mm**
B	width	**7 mm**

WHAT 61804-2RZ MEANS

618	łożysko kulkowe zwykłe (6), seria 18 – cienkościenna
2RZ	non-contact rubber seals, both sides

SPECIFICATIONS

Manufacturer	**SKF**
Manufacturer designation	**61804-2RZ**
Rolling elements	**single-row ball bearing**