Cylindrical roller bearing NU230-EM1 FAG

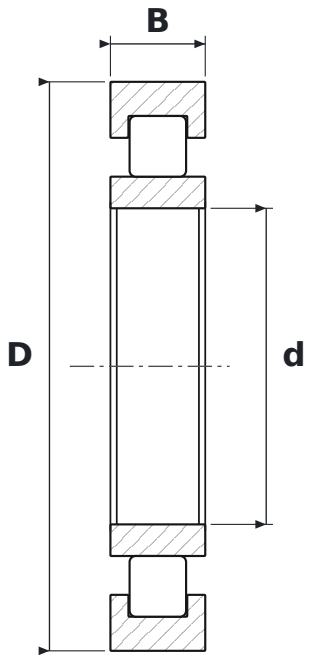

DIMENSIONS

d	bore diameter	**150 mm**
D	outside diameter	**270 mm**
B	width	**45 mm**

WHAT NU230-EM1 MEANS

E	reinforced design, higher load rating
M1	koszyk mosiężny masywny, dwuczęściowy, prowadzony na wałeczkach

SPECIFICATIONS

Manufacturer	**FAG**
Manufacturer designation	**NU230-EM1**
Rolling elements	**single-row cylindrical roller bearing**
Basic dynamic load rating C	**520 kN**
Basic static load rating C0	**590 kN**