Track roller FGL5090 EE NADELLA

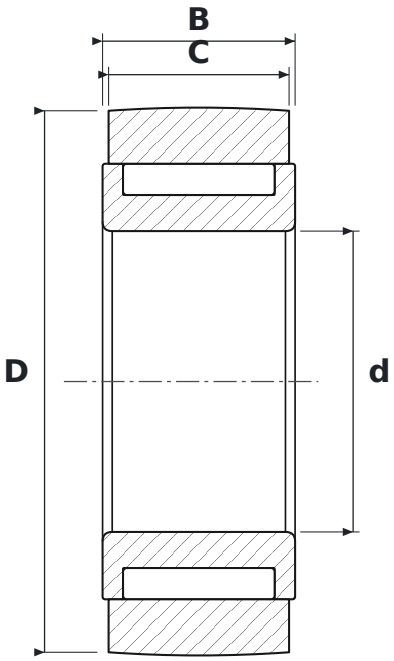

DIMENSIONS

d	bore diameter	**50 mm**
D	outside diameter	**90 mm**
C	roller running width	**30 mm**
B	width	**32 mm**

WHAT FGL5090 EE MEANS

E	reinforced design, higher load rating
E	reinforced design, higher load rating

SPECIFICATIONS

Manufacturer	**NADELLA**
Manufacturer designation	**FGL5090 EE**
C – outer ring width	**30 mm**
Rolling elements	**needle roller bearing, full complement**