Spherical plain bearing GE80 DO ZEN

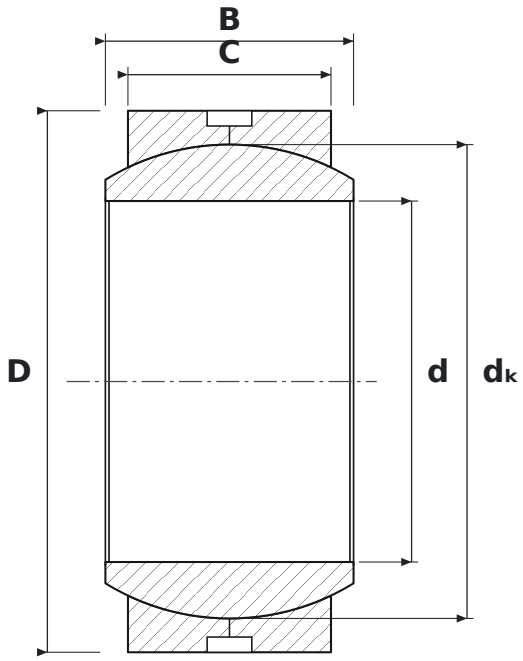

DIMENSIONS

d	bore diameter	**80 mm**
D	outside diameter	**120 mm**
B	inner ring (ball) width	**55 mm**
C	outer ring width	**45 mm**
dK	ball diameter	**105 mm**

SPECIFICATIONS

Manufacturer	**ZEN**
Manufacturer designation	**GE80 DO**
C – outer ring width	**45 mm**
Rolling elements	**plain bearing (no rolling elements)**
Features	**Lubrication groove and holes**