Rod end GAL25 DO ZEN

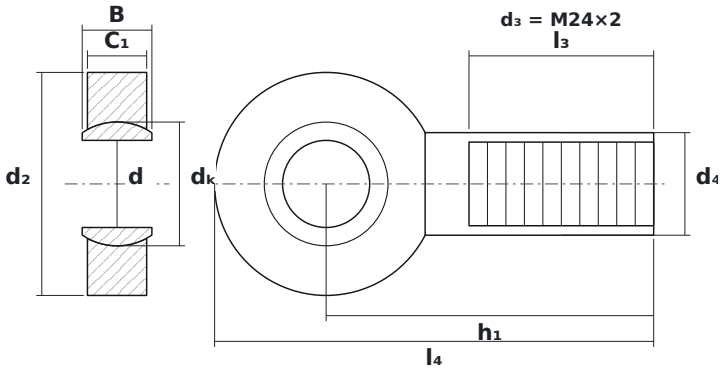

DIMENSIONS

d	bore diameter	**25 mm**
d2	rod end head diameter	**64 mm**
B	ball (inner ring) width	**20 mm**
C1	head (outer ring) width	**17 mm**
dK	ball diameter	**35.5 mm**
h1	ball centre to shank end	**94 mm**
l4	overall length	**426 mm**
l3	thread length	**53 mm**

SPECIFICATIONS

Manufacturer	**ZEN**
Manufacturer designation	**GAL25 DO**
B – inner ring width	**20 mm**
C – outer ring width	**17 mm**
Thread d_3	**M24×2**
Rolling elements	**plain bearing (no rolling elements)**
Catalogue designation	**GAR25DO2RS**
Basic dynamic load rating C	**48 kN**
Basic static load rating C0	**83 kN**