Spherical plain bearing GE45 HO2RS ZEN

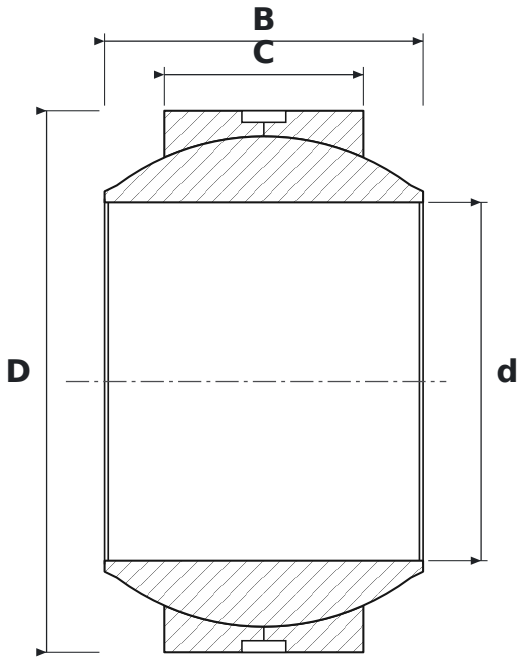

DIMENSIONS

d	bore diameter	**45 mm**
D	outside diameter	**68 mm**
B	inner ring (ball) width	**40 mm**
C	outer ring width	**25 mm**

SPECIFICATIONS

Manufacturer	**ZEN**
Manufacturer designation	**GE45 HO2RS**
C – outer ring width	**25 mm**
Rolling elements	**plain bearing (no rolling elements)**
Features	**Lubrication groove and holes**