Deep groove ball bearing 6318 NKE

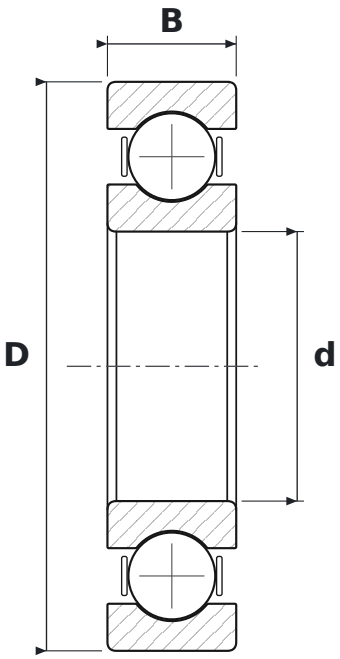

DIMENSIONS

d	bore diameter	**90 mm**
D	outside diameter	**190 mm**
B	width	**43 mm**

SPECIFICATIONS

Manufacturer	**NKE**
Manufacturer designation	**6318**
Rolling elements	**single-row ball bearing**
Seal	**open – no seals**
Radial internal clearance	**CN – normal**