Deep groove ball bearing 6005 NSK

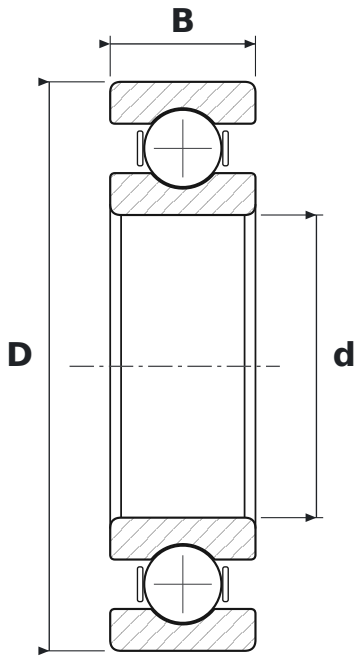

DIMENSIONS

d	bore diameter	**25 mm**
D	outside diameter	**47 mm**
B	width	**12 mm**

SPECIFICATIONS

Manufacturer	**NSK**
Manufacturer designation	**6005**
Rolling elements	**single-row ball bearing**
Seal	**open – no seals**
Radial internal clearance	**CN – normal**