Spherical plain bearing GE110 FO2RS ZEN

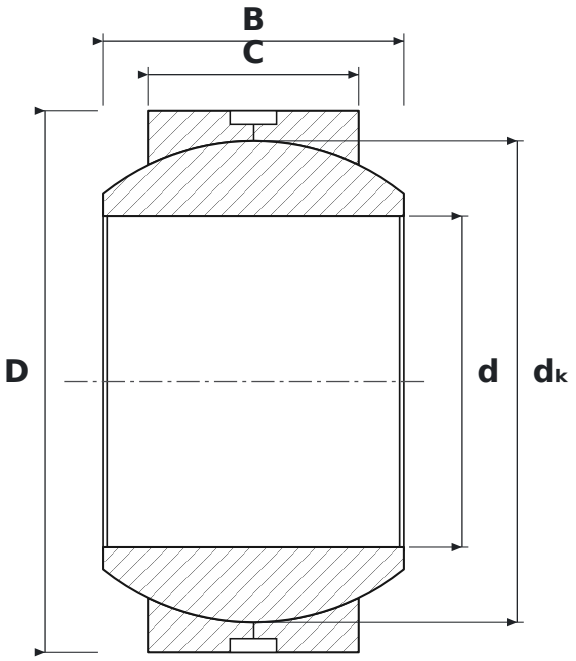

DIMENSIONS

d	bore diameter	**110 mm**
D	outside diameter	**180 mm**
B	inner ring (ball) width	**100 mm**
C	outer ring width	**70 mm**
dK	ball diameter	**160 mm**

SPECIFICATIONS

Manufacturer	**ZEN**
Manufacturer designation	**GE110 FO2RS**
C – outer ring width	**70 mm**
Rolling elements	**plain bearing (no rolling elements)**
2RS	**uszczelnienia stykowe z gumy syntetycznej, dwustronne (od −20 do +110 °C)**
Features	**Lubrication groove and holes**