# Spherical plain bearing GE110 LO ZEN

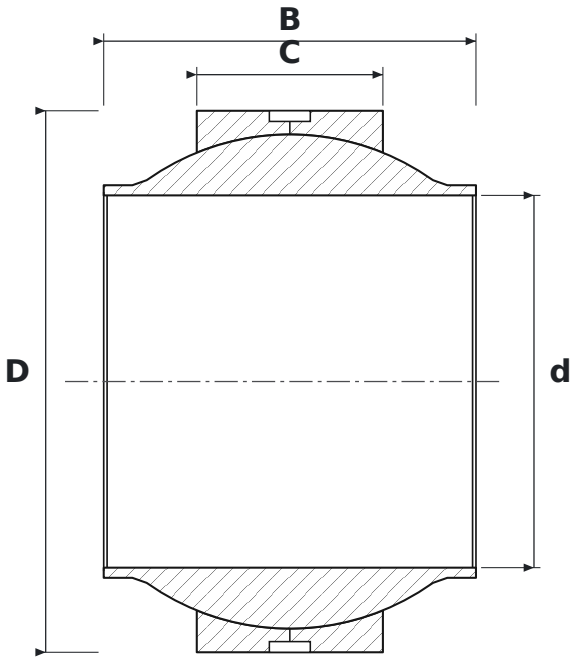


## DIMENSIONS

| | | |
|---|---|---|
| **d** | bore diameter | **110 mm** |
| **D** | outside diameter | **160 mm** |
| **B** | inner ring (ball) width | **110 mm** |
| **C** | outer ring width | **55 mm** |

## SPECIFICATIONS

| | |
|---|---|
| Manufacturer | **ZEN** |
| Manufacturer designation | **GE110 LO** |
| C – outer ring width | **55 mm** |
| Rolling elements | **plain bearing (no rolling elements)** |
| Seal | **open – no seals** |
| Features | **Lubrication groove and holes** |